ASSEMBLY

2012/11/29

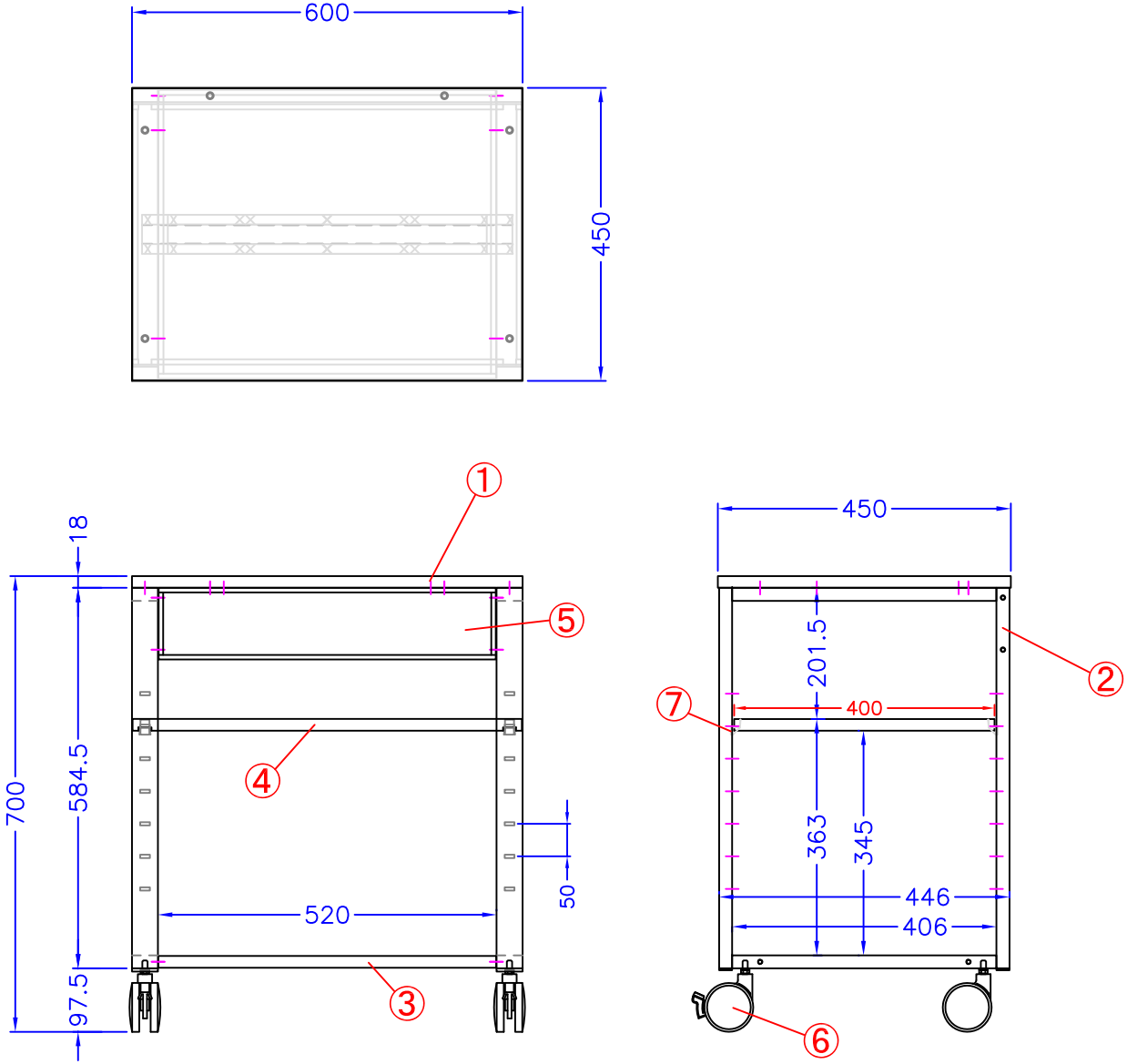


| | | | | | | | | | | |
|---|---|---|---|---|---|---|---|---|---|---|
| △ | | | | | | | | | | |
| △ | | | | | | | | | | |
| △ | | | | | | | | | | |
| △ | | | | | | | | | | |

New Printer table

NPT-645-WH

| | | | | | | |
|---|---|---|---|---|---|---|
| | | | John Yamagata | John Yamagata | | AKIRA CO.,LTD. |
| | | | Drafting | Designing | Check | |

Drawing Number

ASSEMBLY

2012/10/13

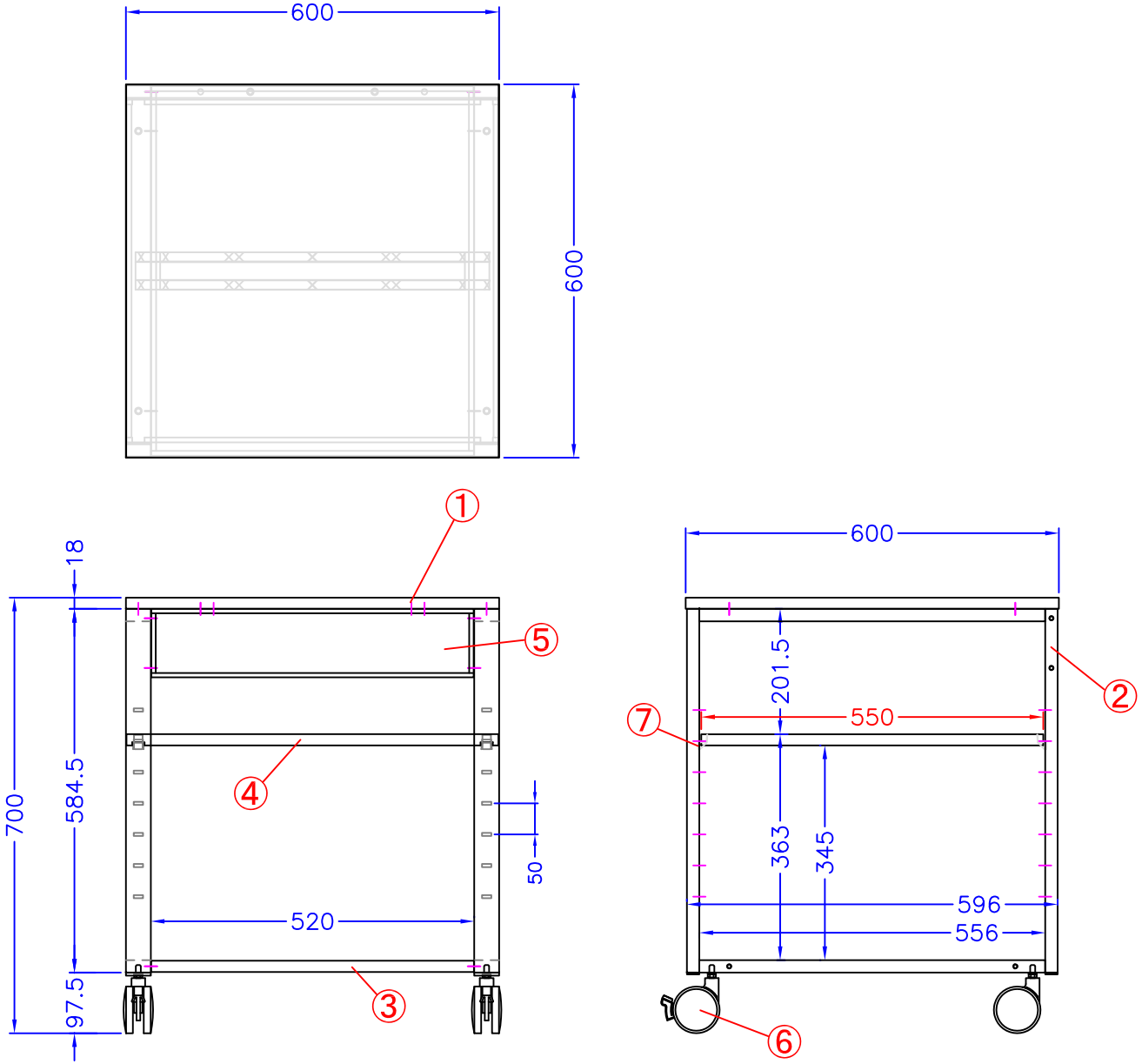


New Printer table

NPT-660-WH

| | | | |
|---|---|---|---|
| John Yamagata | John Yamagata | | AKIRA CO.,LTD. |
| Drafting | Designing | Check | |

Drawing Number

TRYAL

2012/10/13

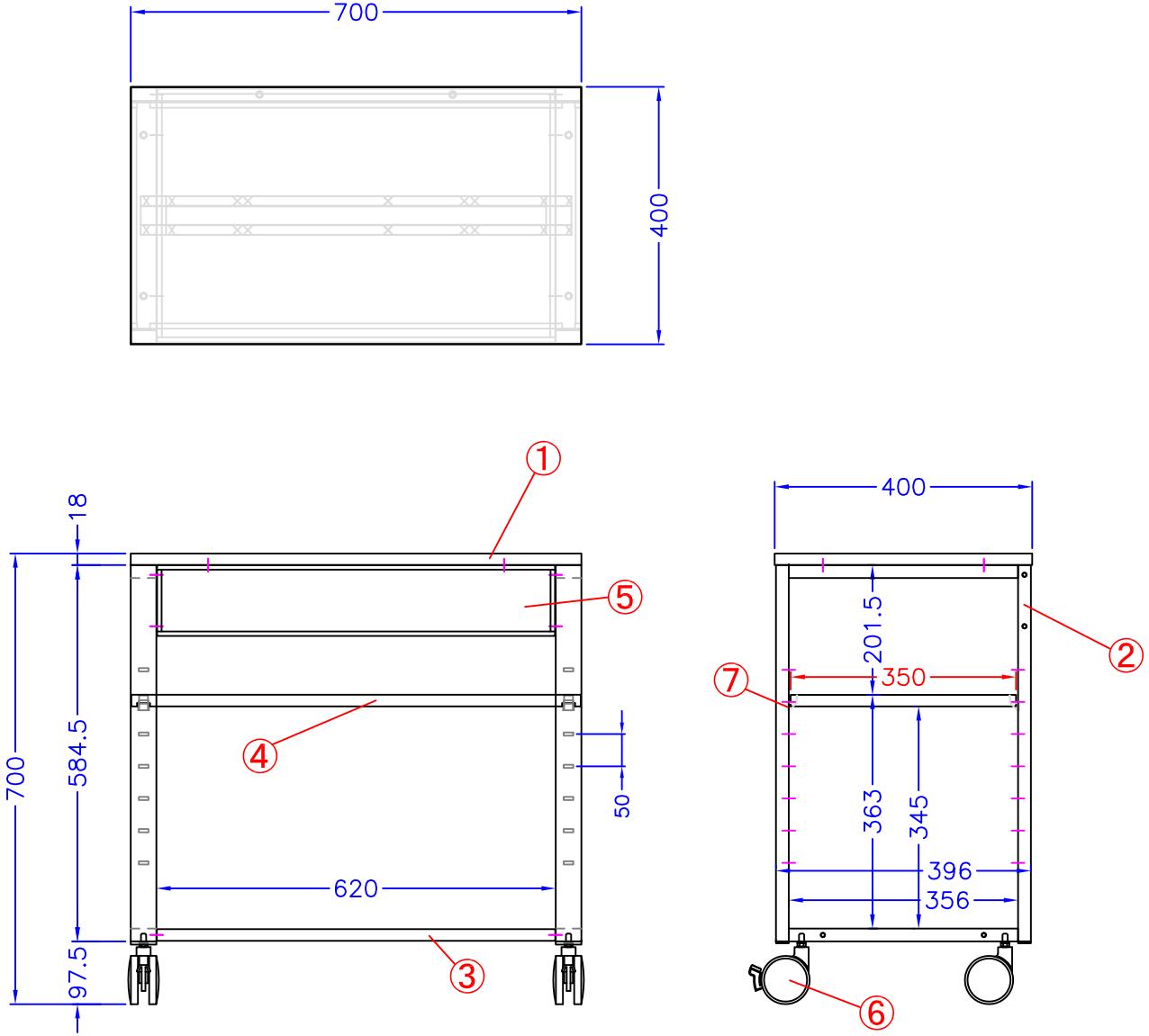


| | | | | | | | | | | |
|---|---|---|---|---|---|---|---|---|---|---|
| △ | | | | | | | | | | |
| △ | | | | | | | | | | |
| △ | | | | | | | | | | |
| △ | | | | | | | | | | |

New Printer table

NPT-740-WH

| | | | | | | | | |
|---|---|---|---|---|---|---|---|---|
| | | | | John Yamagata | John Yamagata | | AKIRA CO.,LTD. | Drawing Number |
| | | | | Drafting | Designing | Check | | |